4.5x3 gazebo template

ROOF & SIDES

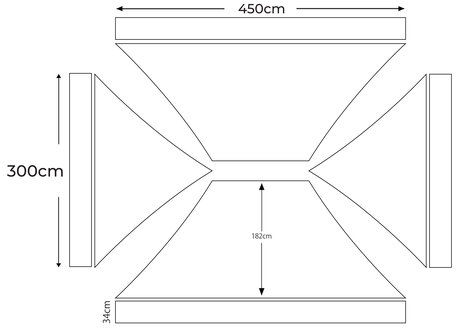

GUIDELINES

- Delete any items not required
- Number the quantities of walls & canopies
- Stay within the lines and DO NOT adjust the dimensions

Full Back wall Inside
450cm
195cm

Full Side Wall Inside (Left)
300cm
195cm

Full Side Wall Inside (Right)
300cm
195cm

Full Front wall Inside
450cm
195cm

Full Back wall Outside
450cm
195cm

Full Side Wall Outside (Left)
300cm
195cm

Full Side Wall Outside (Right)
300cm
195cm

Full Front wall Outside
450cm
195cm

Full Wall with Zip Door Inside
300cm
195cm

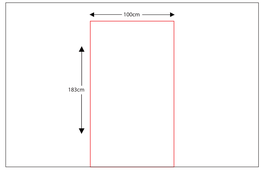

Full Wall With Window Inside
300cm
195cm

Full Wall with Zip Inside
300cm
195cm

Full Wall with Zip Door Inside
450cm
195cm

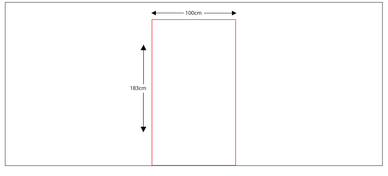

Half Wall Inside
450cm
100cm

Half Wall Inside
300cm
100cm

Half Wall Outside
300cm
100cm

Full Wall with Zip Door Outside
300cm
195cm

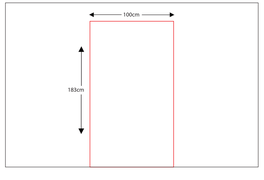

Full Wall With Window Outside
300cm
195cm

Full Wall with Zip Outside
300cm
195cm

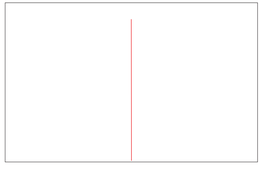

Full Wall with Zip Door Outside
450cm
195cm

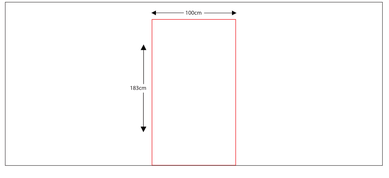

Half Wall Outside
450cm
100cm